USB_SER_4CH

USB to a Quad Interface RS422/TS485/RS422/TTL Level Serial UART Adaptor

Description

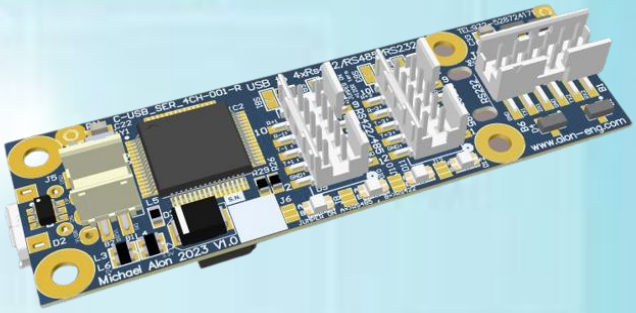

The USB_SER_4CH module is a high-performance single USB interface to four independent RS422/TS485/RS422/TTL ports communication device.
The integrated electronics of the USB_SER_4CH utilize the FTDI FT4232H (USB 2.0 Hi-Speed device) and includes RS422/TS485/RS422/TTL level shifters plus TXD/RXD Leds to provide a visual indication of data traffic through the module.
The module uses a standard USB Micro B device connector or 2.00mm Molex Minitek WTB connector for connection to an upstream host or hub port.
RS422/TS485/RS422/TTL -level signals, are available on an 2.00mm Molex Minitek WTB connector.
The maximum RS422/TS485/RS422/TTL level data rate is 250Kbps (10Mbps Optional)..

The USB_SER_4CH Module requires USB device drivers, which are used to make the USB_SER_4CH appear as four Virtual COM Ports (VCP).
This allows existing serial communications software such as HyperTerminal to exchange data through the USB_SER_4CH to a legacy RS422 peripheral device.

The Card is designed for use in mobile, air, ground and unmanned Applications. Meets the requirements for Autonomous Platforms, Robotics, Transformation, Industrial Automation, Smart Agriculture and more.

For all USB_SER_4CH Features **click here**

Key Features

- Adds quad RS422/TS485/RS422/TTL serial ports by connecting to a USB 2.0 Hi-Speed interface.
- Easy plug & play installation and RS422/TS485/RS422/TTL device connection via 2mm headers
- Works with USB 1.1 & 2.0 Host and Hub ports compatible (480Mbits/Second).
- Industry standard FTDI chip set & device drivers for maximum compatibility
- Microsoft Windows WHQL-certified, Mac OS X, Linux and Windows CE device drivers.
- Installs as four standard Windows COM ports.

*The specifications and pictures are subject to change without prior notice

USB_SER_4CH

USB to a Quad Interface RS422/TS485/RS422/TTL Level Serial UART Adaptor

- Supports Windows Server 2008, Vista, XP, 2000, Windows CE, Linux, Mac OS X
- FIFO with 2k byte transmit buffer, 2k byte receive buffer.
- RS-422 data signals: TxD+, TxD-, RxD, RxD-.
- RS-485 data signals: RS485+(A), RS485-(B).
- RS-232/TTL data signals: Tx, Rx.
- Serial port speed up to 250Kbps (10Mbps Optional).
- Powered by USB port. No external power adapter required.
- Card is covered with conformal coating from moister protection.
  All outputs are protected with TVS diodes.
- Designed to Meat MIL STD-810.
- Powered by USB port. No external power adapter required
- Onboard resettable fuse and protection TVS diode, provides over-current/over-voltage protection
- Onboard IO protection TVS for Surge and ESD protection, providing safe and reliable communication
- **Applications**
- Communications & Networking, Wireless, Portable Devices, Medical, Security, Audio, Industrial, Consumer Electronics, Sensing & Instrumentation, Imaging, Video & Vision

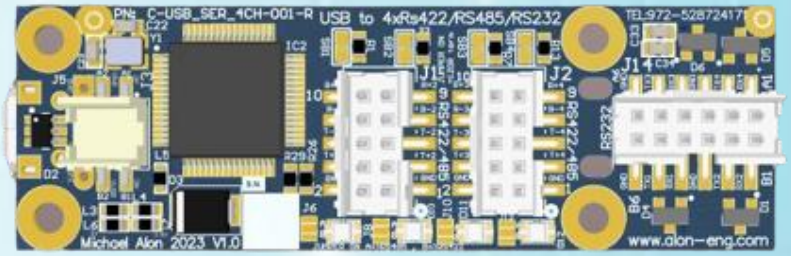

Orderable Part numbers:

base part number	C-USB_SER_4CH-001-R
USB to 4 X RS422	USB_SER_4CH-001-R-4x422
USB to 4 X RS485	USB_SER_4CH-001-R-4x485
USB to 4 X RS232	USB_SER_4CH-001-R-4x232
USB to 2 X TTL	USB_SER_4CH-001-R-4xTTL
USB to 2 X RS422 , 2 X RS232	USB_SER_4CH-001-R-2x422-2x232
USB to 2 X RS422, 2 X TTL	USB_SER_4CH-001-R-2x422-2xTTL
USB to 2 X RS422, 2 X RS485	USB_SER_4CH-001-R-2x422-2x485
USB to 3 X RS485, 1 X RS232,5V, Conformal Coating	USB_SER_4CH-3xRS485-1xRS232-5VC

Optional suffix:

-5V – 5V output from Card

-C – Conformal Coating

-P – Mating connectors and Pins supply with Card

***Any other even configuration is available to order**

*The specifications and pictures are subject to change without prior notice

ALON Eng. Haetrog 114 Ganot, Israel, Zip 50293 Mobile: 972-(0)52-8724171 E-mail: mikealon@netvision.net.il

ALON Eng. פיתוח וייצור מערכות בקרה אלקטרוניות צבאיות מתקדמות

ISO 9001:2015 IQC Institute of Quality & Control Certified Quality Management System

USB_SER_4CH

USB to a Quad Interface RS422/TS485/RS422/TTL Level Serial UART Adaptor

Specifications	
Power:	+5 V DC
Weight (approx.):	~10g
Dimensions:	~66x21x10mm
Screw holes	M2.5
Environmental and physical specifications	
Dust/Rain Sealing Level:	IP20- card can be supplied with conformal coating option
Temperature:	-20 to +70 °C operational -40C to +85C storage
System:	
IC:	FTDI 4232 H
OS support:	Windows / Linux
Communication:	USB 2.0,up to 4 RS232/RS422/485/TTL or any even combination
I/O	Internal - 8-bit Digital TTL
System Indicator	TX and RX led
USB Connector	USB Micro B and 4 pin 2.00mm Molex Minitek Wire to board and 100 mil 4 pins header
connectors	8/10 pins 2.00mm Molex Minitek Wire to board

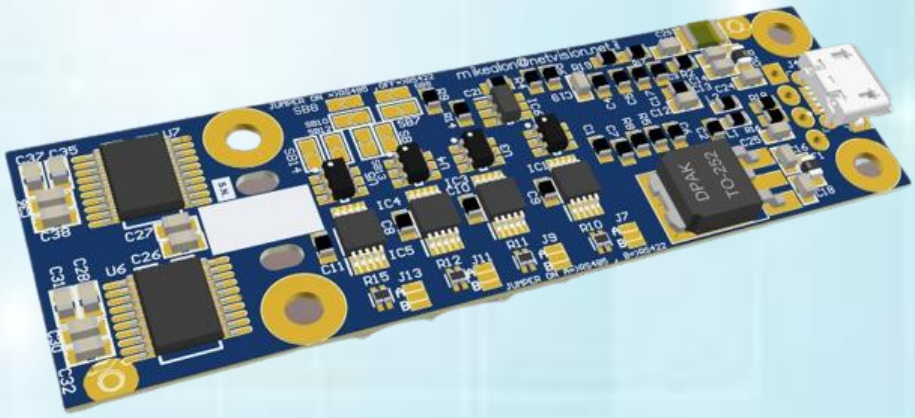

*The specifications and pictures are subject to change without prior notice

ALON Eng. Haetrog 114 Ganot, Israel, Zip 50293 Mobile: 972-(0)52-8724171 E-mail: mikealon@netvision.net.il

ISO 9001:2015 certified www.ALON-ENG.COM

USB_SER_4CH

USB to a Quad Interface RS422/TS485/RS422/TTL Level Serial UART Adaptor

Dimensions:

65.8 x 21.1 x 10 mm

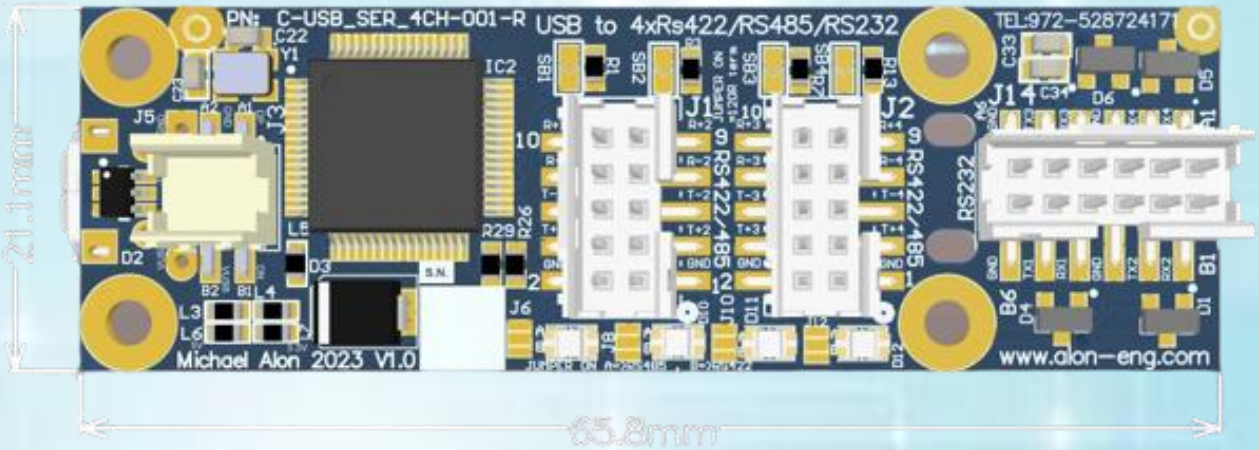

*The specifications and pictures are subject to change without prior notice

ALON Eng. Haetrog 114 Ganot, Israel, Zip 50293 Mobile: 972-(0)52-8724171 E-mail: mikealon@netvision.net.il

USB_SER_4CH

USB to a Quad Interface RS422/TS485/RS422/TTL Level Serial UART Adaptor

Connectors:

The PN of the connectors are the Onboard connectors.

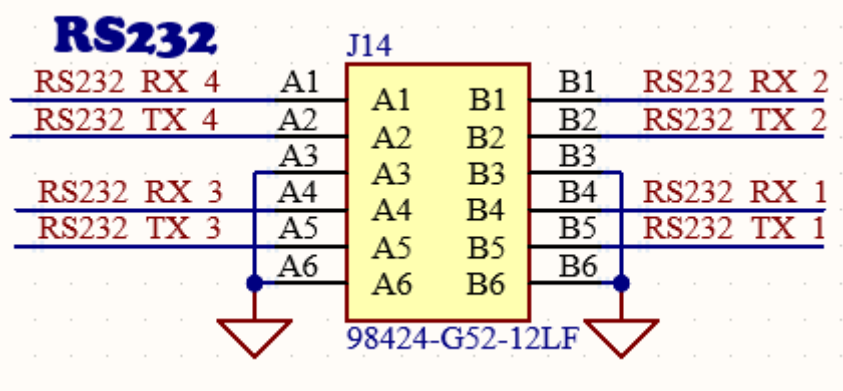

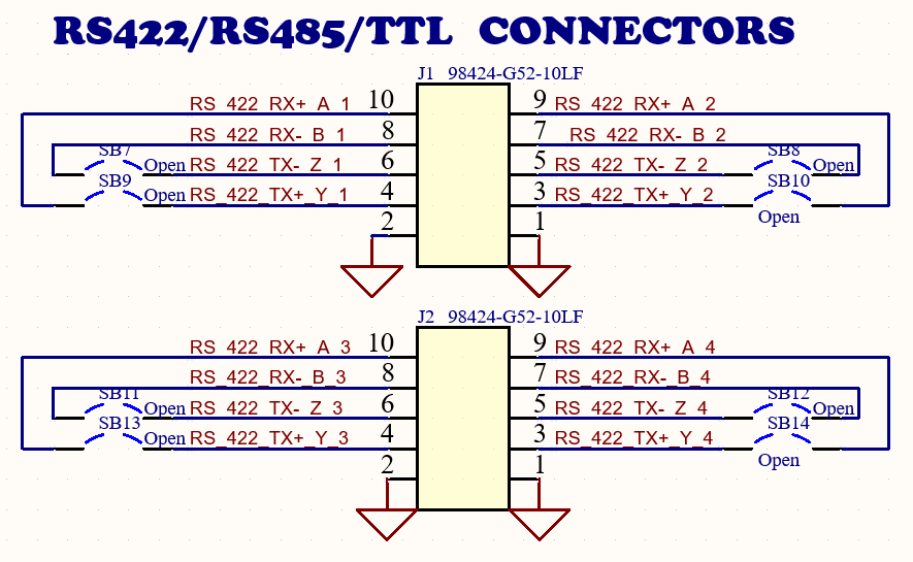

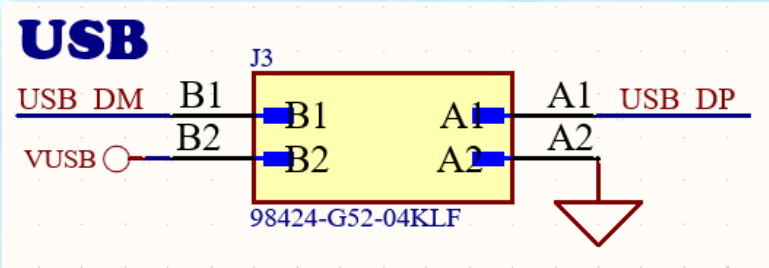

*The specifications and pictures are subject to change without prior notice